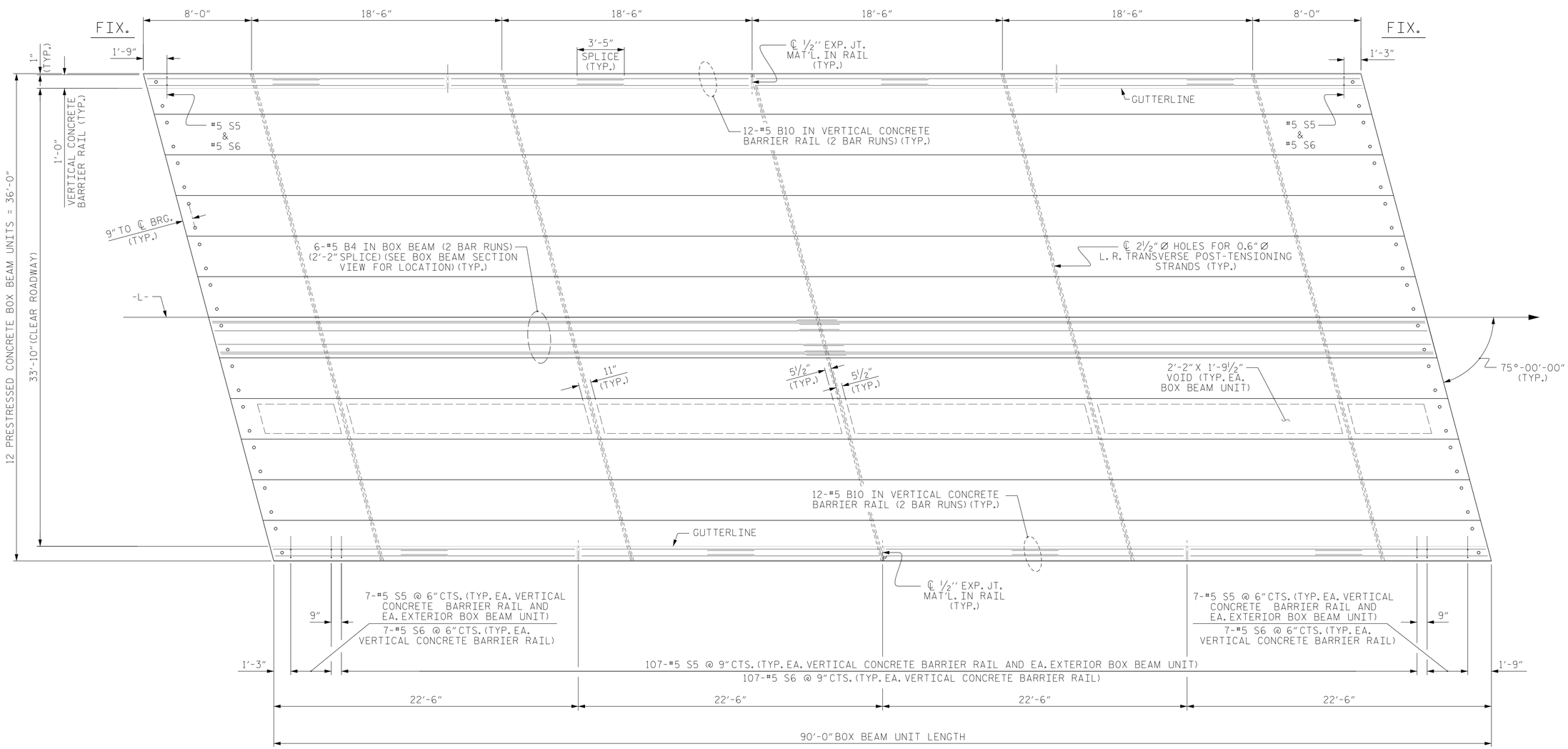

PLAN OF UNIT

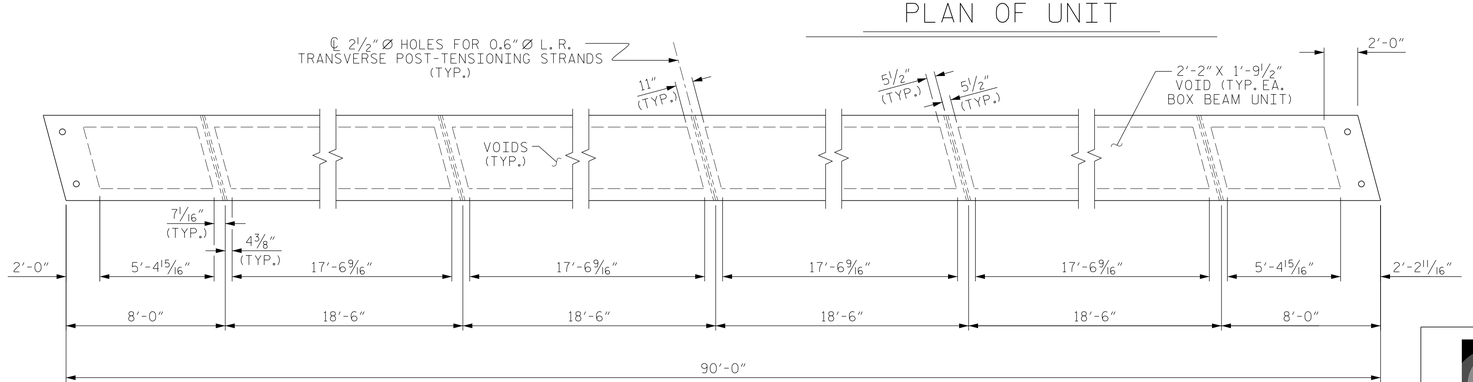

DIAPHRAGM AND VOID LAYOUT

PROJECT NO. 17BP.5.R.56

WARREN COUNTY

STATION: 15+60.00 -L-

SHEET 2 OF 7

NORTH CAROLINA PROFESSIONAL SEAL 11725 ENGINEER DAVID R. RUGGLES

DOCUMENT NOT CONSIDERED FINAL UNLESS ALL SIGNATURES COMPLETED

STEWART

Firm License No. C-1051
421 Fayetteville St,
Suite 400
Raleigh, NC 27601
T 919.380.8750
www.stewartinc.com

STATE OF NORTH CAROLINA
DEPARTMENT OF TRANSPORTATION
RALEIGH

STANDARD

PLAN OF 90' UNIT 33'-10" CLEAR ROADWAY 75° SKEW

REVISIONS						SHEET NO.
NO.	BY:	DATE:	NO.	BY:	DATE:	S-6
1			3			TOTAL SHEETS
2			4			21

ASSEMBLED BY :	H.ASSFOURA	DATE :	11/14
CHECKED BY :	P.JACOB	DATE :	11/14
DRAWN BY : DGE	8/11	REV. 8/14	MAA/TMG
CHECKED BY : TMG	11/11		

3/8/2016
...\400_006_17BP5R56_SMU_SP02.dgn
USER:jloftus

STD.NO.33PCBB_36_75S_90L