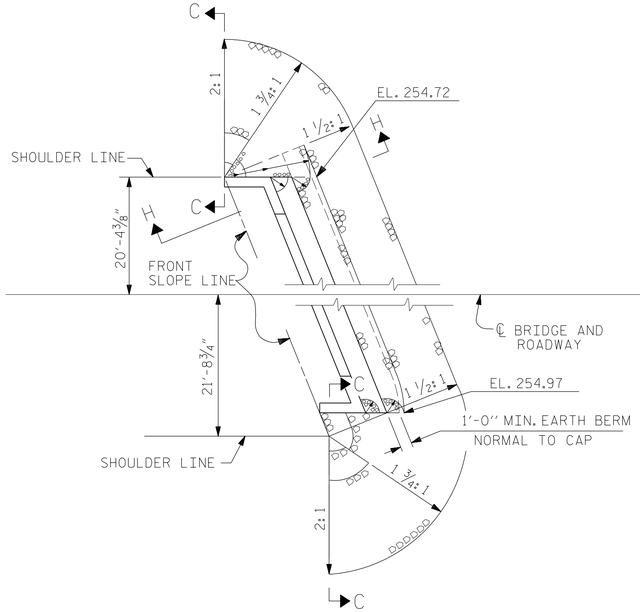

@ END BENT 1

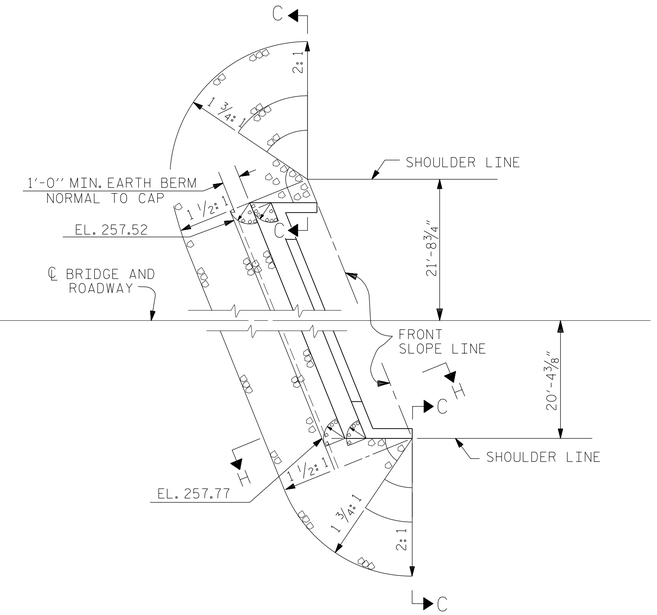

PLAN

@ END BENT 2

NOTES :

FOR BERM WIDTH DIMENSIONS, SEE GENERAL DRAWING.

ESTIMATED QUANTITIES		
BRIDGE @ STA. 15+60.00 -L-	RIP RAP CLASS II (2'-0" THICK)	GEOTEXTILE FOR DRAINAGE
	TONS	SQUARE YARDS
END BENT 1	171	190
END BENT 2	207	230
BANK STAB. - END BENT 2	* 120	*130

* SEE GENERAL PLAN DWG FOR LIMITS OF BANK STABILIZATION CLASS II RIP RAP

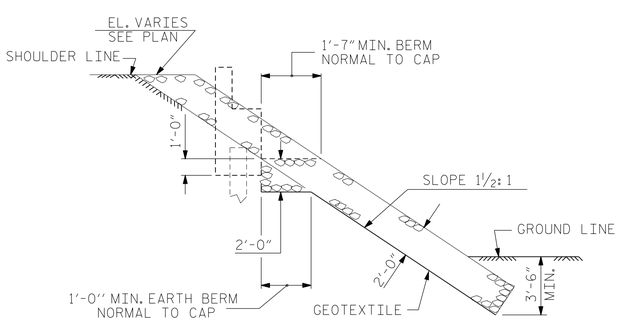

SECTION H-H

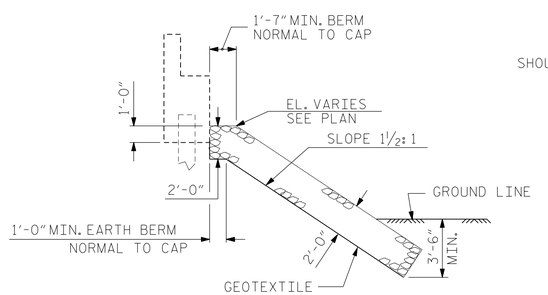

℄ SECTION
BERM RIP RAPPED

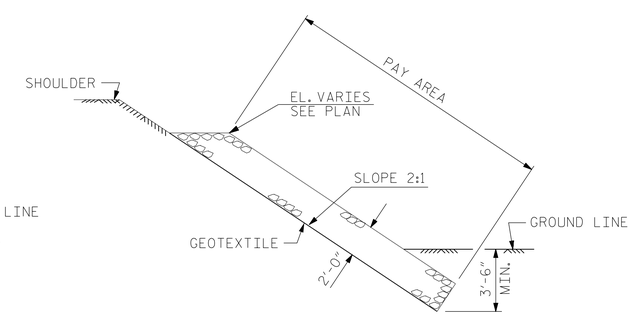

SECTION C-C

PROJECT NO. 17BP.5.R.56

WARREN COUNTY

STATION: 15+60.00 -L-

NORTH CAROLINA PROFESSIONAL SEAL 11725 ENGINEER DAVID R. RUGGLES

DOCUMENT NOT CONSIDERED FINAL UNLESS ALL SIGNATURES COMPLETED

STATE OF NORTH CAROLINA
DEPARTMENT OF TRANSPORTATION
RALEIGH

STANDARD

RIP RAP DETAILS

STEWART
Firm License No. C-1051
421 Fayetteville St,
Suite 400
Raleigh, NC 27601
T 919.380.8750
www.stewartinc.com

REVISIONS						
NO.	BY:	DATE:	NO.	BY:	DATE:	
1			3			
2			4			

SHEET NO. S-19

TOTAL SHEETS 21

ASSEMBLED BY : H.ASSFOURA		DATE : 11/14	
CHECKED BY : P.JACOB		DATE : 11/14	
DRAWN BY : REK 1/84	REV. 5/1/06R		TLA/GM
CHECKED BY : RDU 1/84	REV. 10/1/11		MAA/GM
	REV. 12/21/11		MAA/GM

3/8/2016
...\400_019_17BP5R56_SMU_RR01.dgn
USER:jloftus

STD. NO. RR1