PROJECT REFERENCE NO.	SHEET NO.
17BP.5.R.56	EC-6
R/W SHEET NO.	
ROADWAY DESIGN ENGINEER	HYDRAULICS ENGINEER

ONSITE CONCRETE WASHOUT STRUCTURE

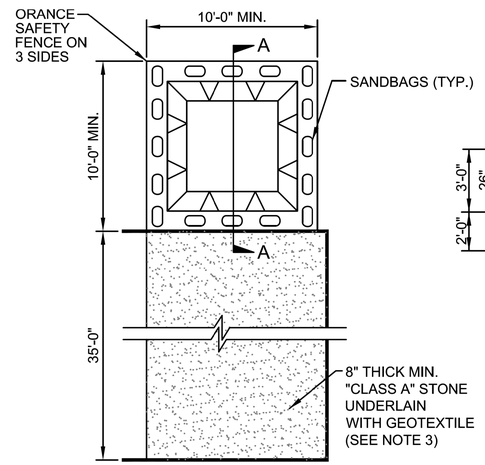

PLAN

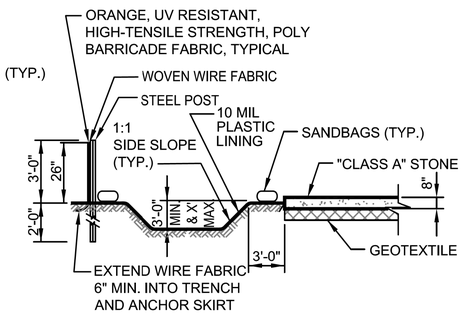

SECTION A-A

NOTES:
1. ACTUAL LOCATION DETERMINED IN FIELD

2. THE CONCRETE WASHOUT STRUCTURES SHALL BE MAINTAINED TO PROVIDE ADEQUATE HOLDING CAPACITY WITH A MINIMUM FREEBOARD OF 12 INCHES.

3. STONE GRAVEL PAD CONSTRUCTED WITH "CLASS A" STONE OR OTHER AGGREGATE MATERIAL APPROVED BY ENGINEER.

BELOW GRADE WASHOUT STRUCTURE

NOT TO SCALE

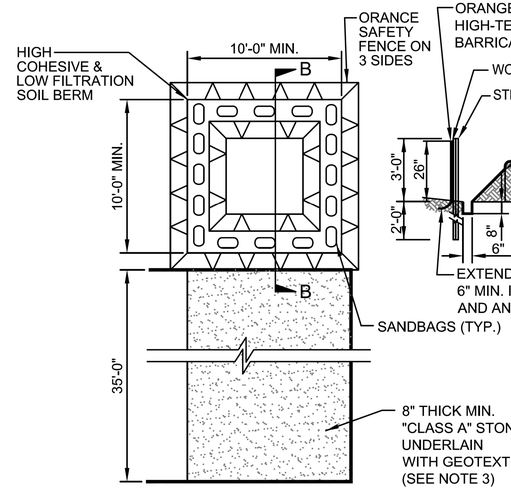

PLAN

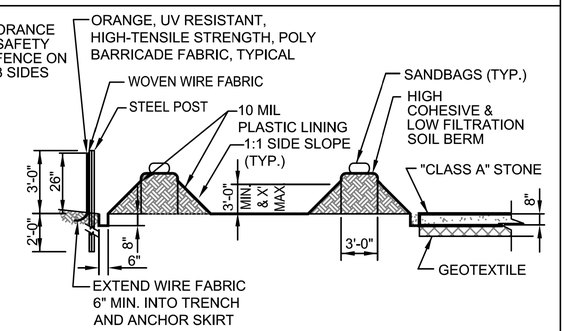

SECTION B-B

NOTES:
1. ACTUAL LOCATION DETERMINED IN FIELD

2. THE CONCRETE WASHOUT STRUCTURES SHALL BE MAINTAINED TO PROVIDE ADEQUATE HOLDING CAPACITY WITH A MINIMUM FREEBOARD OF 12 INCHES.

3. STONE GRAVEL PAD CONSTRUCTED WITH "CLASS A" STONE OR OTHER AGGREGATE MATERIAL APPROVED BY ENGINEER.

ABOVE GRADE WASHOUT STRUCTURE

NOT TO SCALE