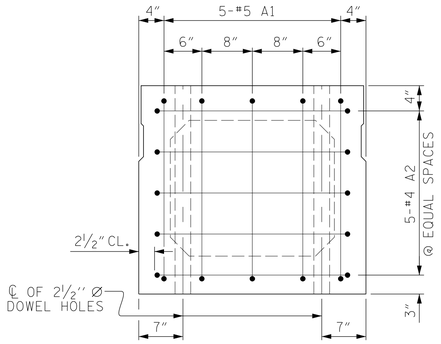

END ELEVATION

SHOWING PLACEMENT OF #5 & #4 "A" BARS AND LOCATION OF DOWEL HOLES. (INTERIOR BOX BEAM SECTION SHOWN-EXTERIOR SECTION SIMILAR EXCEPT SHEAR KEY LOCATION. STRAND LAYOUT NOT SHOWN.)

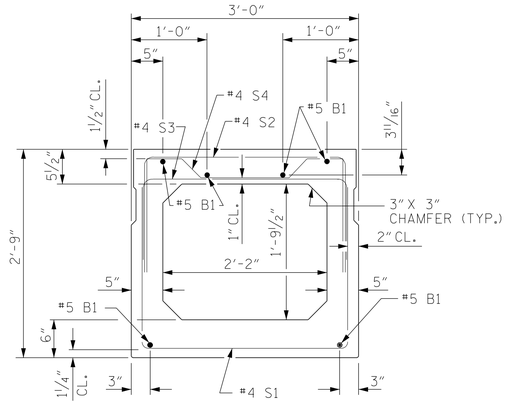

INTERIOR BOX BEAM SECTION

(STRAND LAYOUT NOT SHOWN)

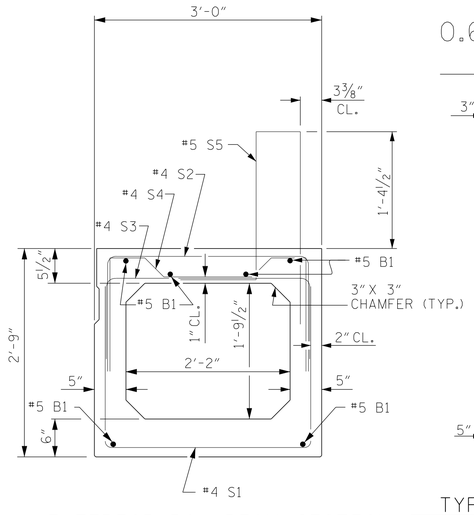

EXTERIOR BOX BEAM SECTION

(STRAND LAYOUT NOT SHOWN)

0.6" Ø LOW RELAXATION STRAND LAYOUT

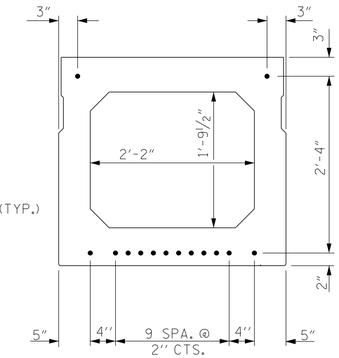

TYPICAL STRAND LOCATION

(14 STRANDS REQUIRED)

DEBONDING LEGEND

● FULLY BONDED STRANDS

BAR TYPES

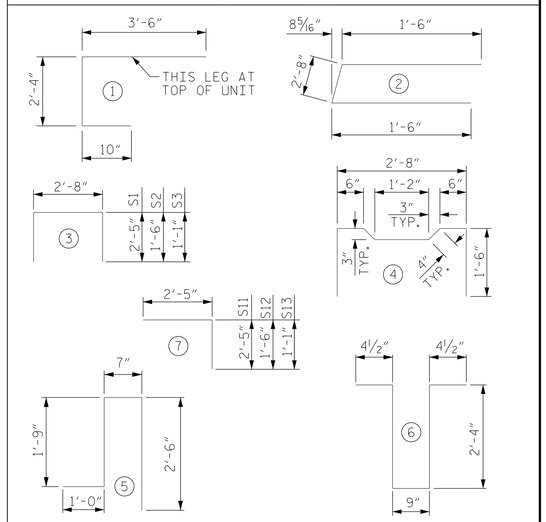

ALL BAR DIMENSIONS ARE OUT TO OUT

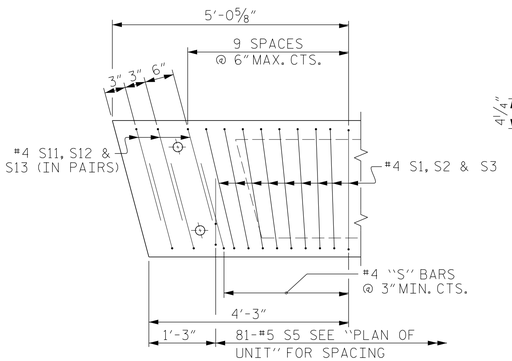

DETAIL "B"

EXTERIOR UNIT SHOWN, INTERIOR UNIT SIMILAR EXCEPT OMIT #5 S5 BARS. "B" BARS AND "A" BARS NOT SHOWN.

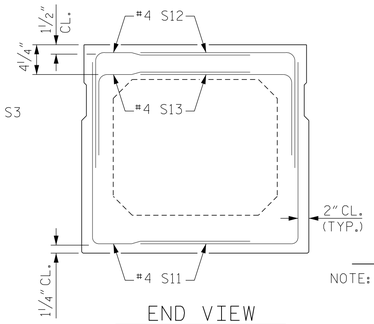

END VIEW

(SHOWING #4 "S" BARS IN END OF BEAM)

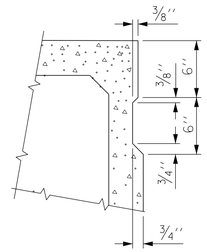

SHEAR KEY DETAIL

NOTE: OMIT SHEAR KEY ON OUTSIDE FACE OF EXTERIOR BOX BEAMS.

GRADE 270 STRANDS	
	0.6" Ø L.R.
AREA (SQUARE INCHES)	0.217
ULTIMATE STRENGTH (LBS. PER STRAND)	58,600
APPLIED PRESTRESS (LBS. PER STRAND)	43,950

BILL OF MATERIAL FOR ONE BOX BEAM SECTION

				EXTERIOR UNIT		INTERIOR UNIT	
BAR	NUMBER	SIZE	TYPE	LENGTH	WEIGHT	LENGTH	WEIGHT
A1	10	#5	1	6'-8"	70	6'-8"	70
A2	28	#4	2	5'-8"	106	5'-8"	106
B1	6	#5	STR	59'-8"	373	59'-8"	373
K1	9	#4	6	6'-2"	37	6'-2"	37
K2	6	#4	STR	2'-7"	10	2'-7"	10
S1	52	#4	3	7'-6"	261	7'-6"	261
S2	52	#4	3	5'-8"	197	5'-8"	197
S3	85	#4	3	4'-10"	274	4'-10"	274
S4	33	#4	4	5'-10"	129	5'-10"	129
S11	12	#4	7	4'-10"	39	4'-10"	39
S12	12	#4	7	3'-11"	31	3'-11"	31
S13	12	#4	7	3'-6"	28	3'-6"	28
* S5	81	#5	5	5'-10"	493	--	--
REINFORCING STEEL				1555	LBS.	1555	LBS.
* EPOXY COATED REINF. STEEL				493	LBS.		
5000 P.S.I. CONCRETE				10.8	CU. YDS.	10.7	CU. YDS.
0.6" Ø L.R. STRANDS				No. 14		No. 14	

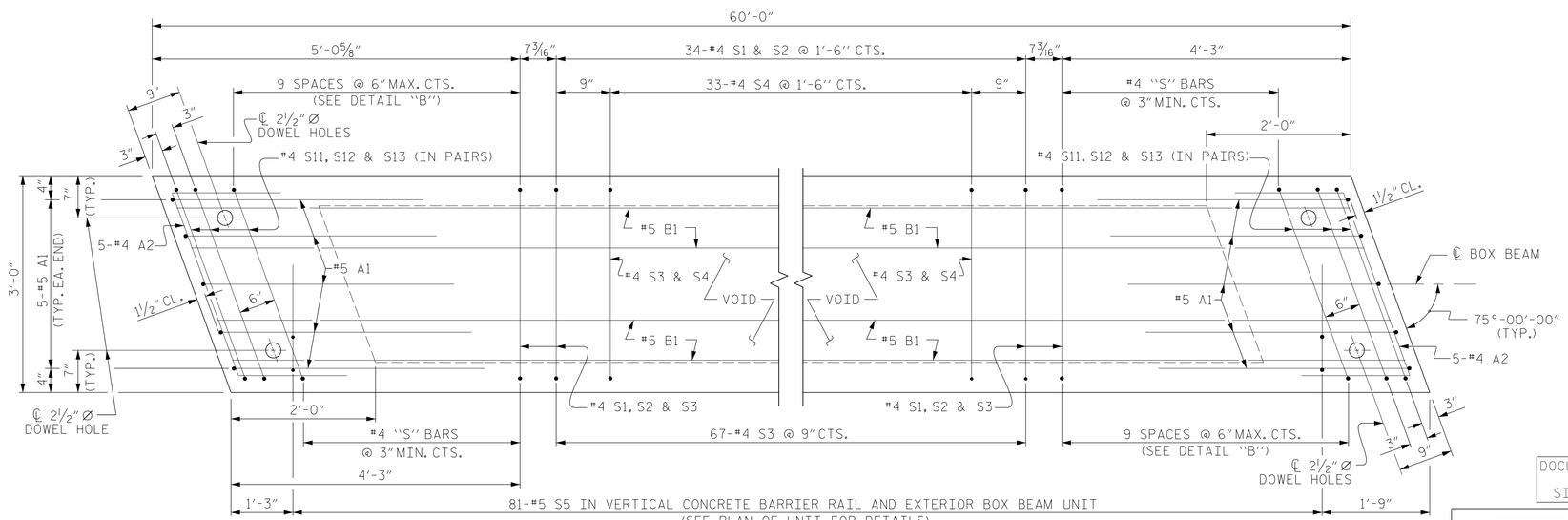

PLAN OF BOX BEAM

EXTERIOR UNIT SHOWN, INTERIOR UNIT SIMILAR EXCEPT OMIT #5 S5 BARS.
FOR LOCATION OF DIAPHRAGMS, SEE "PLAN OF UNIT".
FOR THREADED INSERTS, SEE "THREADED INSERT DETAIL".
FOR REINFORCING STEEL IN DIAPHRAGMS, SEE "DOUBLE DIAPHRAGM DETAILS".

PROJECT NO. 17BP.5.R.56

WARREN COUNTY

STATION: 15+60.00 -L-

SHEET 5 OF 7

NORTH CAROLINA PROFESSIONAL SEAL 11725 ENGINEER DAVID R. RUGGLES

DOCUMENT NOT CONSIDERED FINAL UNLESS ALL SIGNATURES COMPLETED

STEWART

Firm License No. C-1051
421 Fayetteville St,
Suite 400
Raleigh, NC 27601
T 919.380.8750
www.stewartinc.com

STATE OF NORTH CAROLINA
DEPARTMENT OF TRANSPORTATION
RALEIGH

3'-0" X 2'-9" PRESTRESSED CONCRETE BOX BEAM UNIT

REVISIONS						SHEET NO.
NO.	BY:	DATE:	NO.	BY:	DATE:	S-9
1			3			TOTAL SHEETS
2			4			21

DRAWN BY: H.ASSFOURA DATE: 11/14
CHECKED BY: P.JACOB DATE: 11/14
DESIGN ENGINEER OF RECORD: D.RUGGLES DATE: 11/15

3/8/2016
...\400_009_17BP5R56_SMU_SP05.dgn
USER:jloftus