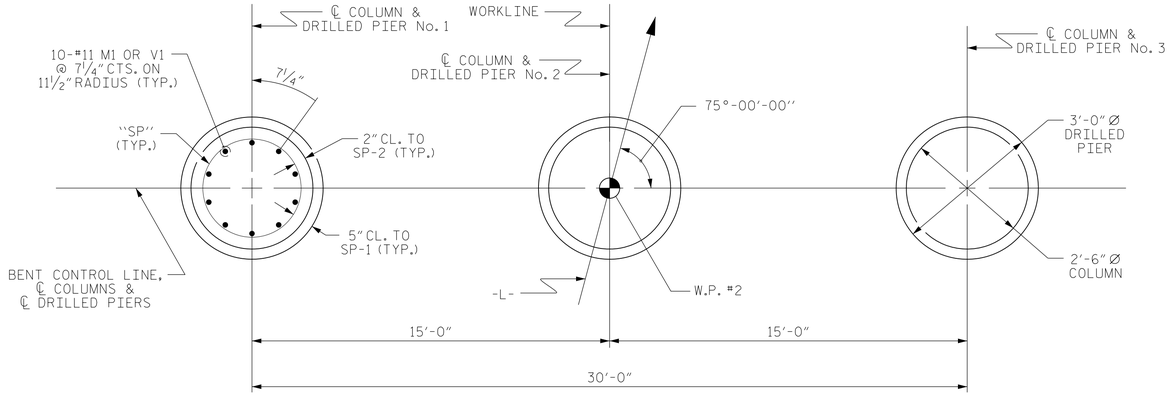

PLAN OF DRILLED PIERS & COLUMNS

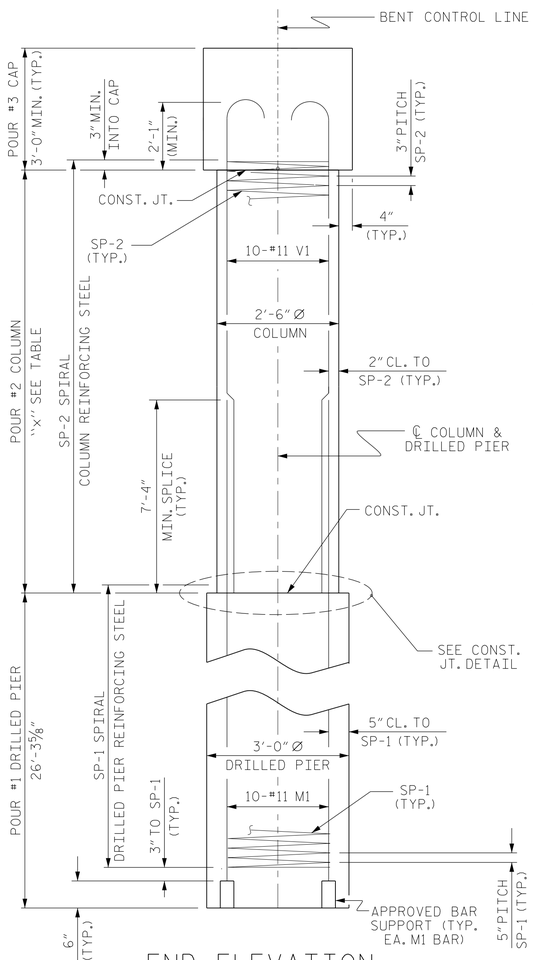

END ELEVATION

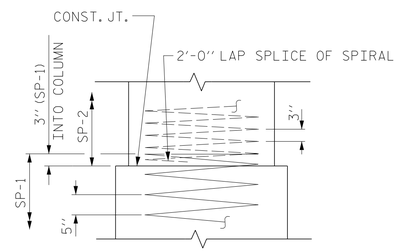

CONSTRUCTION JOINT DETAIL

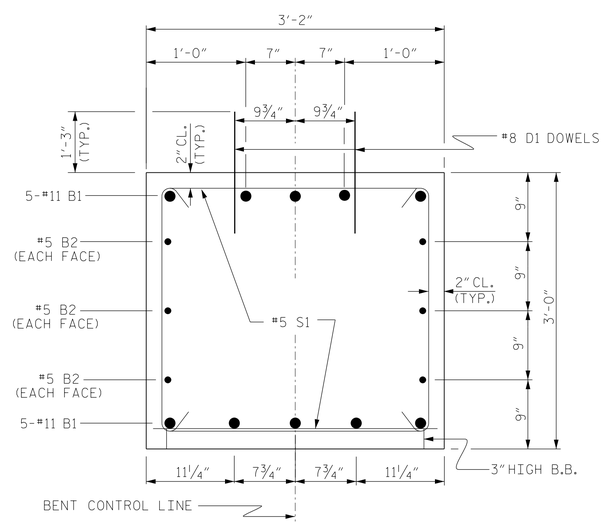

SECTION THRU CAP

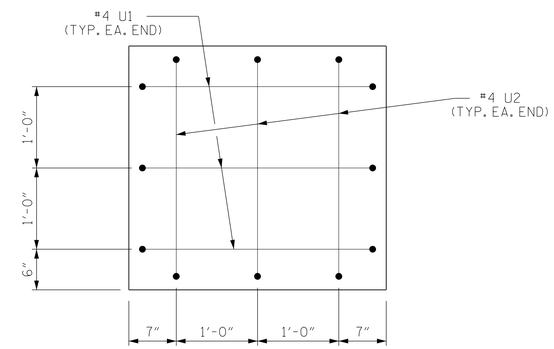

END OF CAP VIEW

(TYPICAL BOTH ENDS)

BAR TYPES

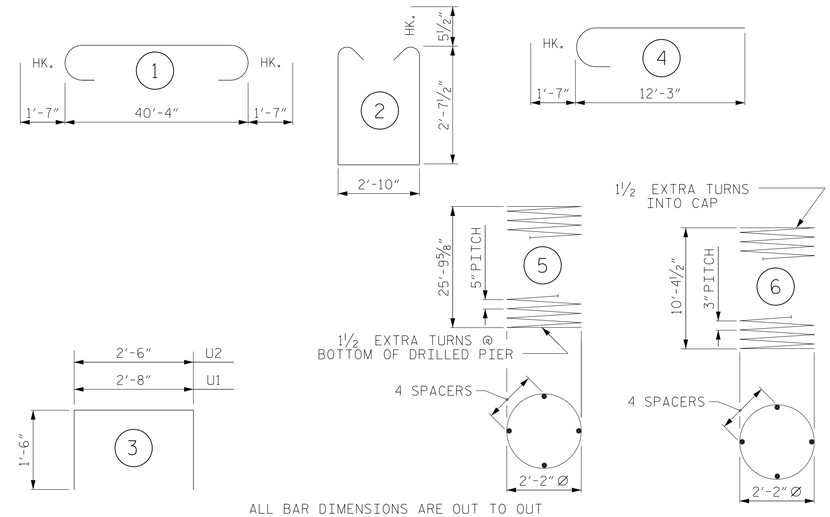

ALL BAR DIMENSIONS ARE OUT TO OUT

BILL OF MATERIAL

FOR ONE BENT

BAR	NO.	SIZE	TYPE	LENGTH	WEIGHT
B1	10	#11	1	43'-6"	2311
B2	6	#5	STR	40'-6"	253
D1	48	#8	STR	2'-3"	288
M1	30	#11	STR	36'-2"	5765
S1	72	#5	2	9'-0"	676
U1	6	#4	3	5'-8"	23
U2	6	#4	3	5'-6"	22
V1	30	#11	4	13'-10"	2205

REINFORCING STEEL (FOR ONE BENT) 11543 LBS.

SP-1	3	*	5	422'-2"	1321
SP-2	3	**	6	287'-2"	575

SPIRAL COLUMN REINFORCING STEEL (FOR ONE BENT) 1896 LBS.

* THE SP-1 SPIRAL REINFORCING STEEL SHALL BE W31 OR D-31 COLD DRAWN WIRE OR #5 PLAIN OR DEFORMED BAR

** THE SP-2 SPIRAL REINFORCING STEEL SHALL BE W20 OR D-20 COLD DRAWN WIRE OR #4 PLAIN OR DEFORMED BAR

CLASS A CONCRETE BREAKDOWN (FOR ONE BENT)

POUR #2 (COLUMNS)	5.5 C.Y.
POUR #3 (CAP)	14.4 C.Y.
TOTAL CLASS A CONCRETE	19.9 C.Y.

DRILLED PIERS: (FOR ONE BENT)

DRILLED PIER CONCRETE POUR #1 (DRILLED PIERS)	20.7 C.Y.
3'-0" Ø DRILLED PIER NOT IN SOIL	29 LIN. FT.
3'-0" Ø DRILLED PIER IN SOIL	50 LIN. FT.
PERMANENT STEEL CASING FOR 3'-0" Ø DRILLED PIER	49 LIN. FT.
CSL TUBES	333.6 LIN. FT.

	"X"
COLUMN 1	9'-11¾"
COLUMN 2	10'-0⅝"
COLUMN 3	10'-1½"

PROJECT NO. 17BP.5.R.56

WARREN COUNTY

STATION: 15+60.00 -L-

SHEET 2 OF 2

NORTH CAROLINA PROFESSIONAL SEAL 11725 ENGINEER DAVID R. RUGGLES

DOCUMENT NOT CONSIDERED FINAL UNLESS ALL SIGNATURES COMPLETED

STEWART

Firm License No. C-1051
421 Fayetteville St,
Suite 400
Raleigh, NC 27601
T 919.380.8750
www.stewartinc.com

STATE OF NORTH CAROLINA
DEPARTMENT OF TRANSPORTATION
RALEIGH

SUBSTRUCTURE

BENT No. 1

REVISIONS								SHEET NO.
NO.	BY:	DATE:	NO.	BY:	DATE:			S-18
1			3					TOTAL SHEETS
2			4					21

DRAWN BY:	H.ASSFOURA	DATE :	11/14
CHECKED BY:	P.JACOB	DATE :	11/14
DESIGN ENGINEER OF RECORD:	D.RUGGLES	DATE :	11/15

3/8/2016
...\400_018.17BP5R56_SMU_B02.dgn
USER:jloftus