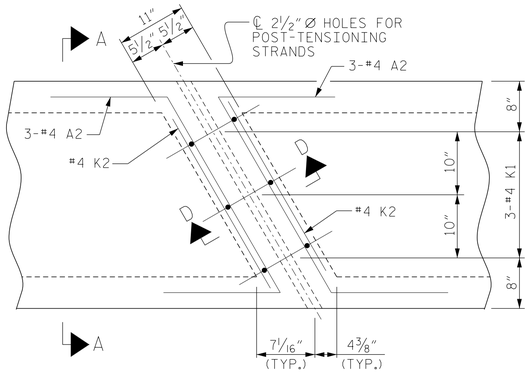

PLAN

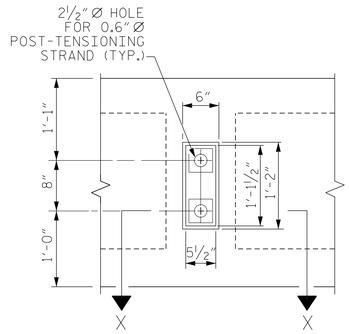

VIEW Y-Y

SHOWING ELEVATION VIEW OF GROUTED RECESS

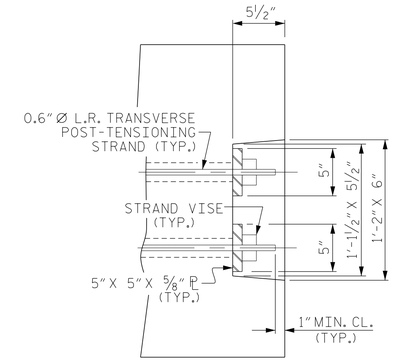

DETAIL "C"

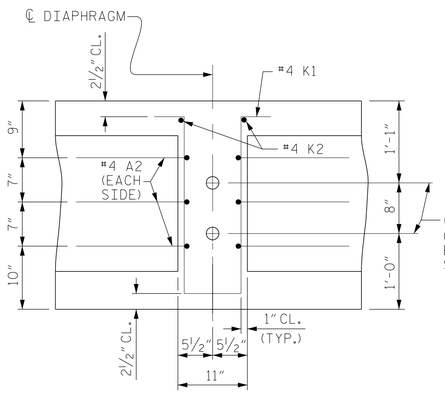

SECTION D-D

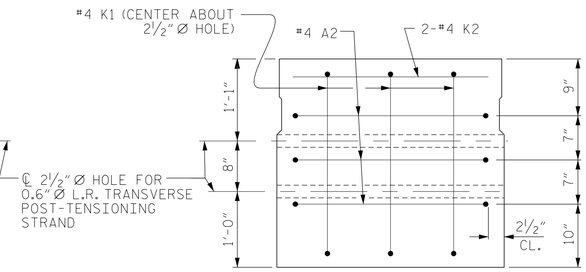

SECTION A-A

VOIDS NOT SHOWN

DOUBLE DIAPHRAGM DETAILS

#4 "S" BARS NOT SHOWN. #4 "S" BARS MAY BE SHIFTED SLIGHTLY TO CLEAR 2½" Ø HOLE.

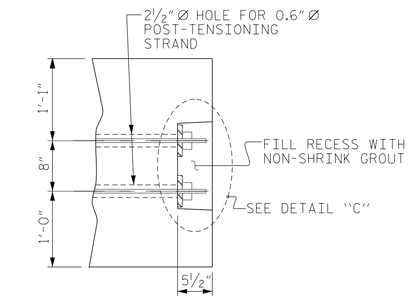

PART SECTION AT RECESS

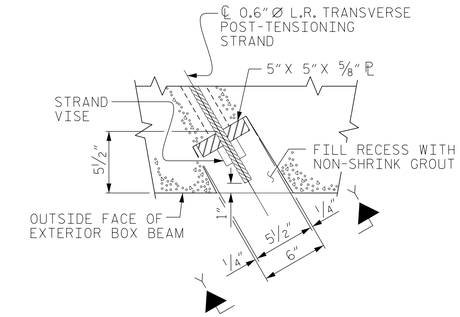

SECTION X-X

SHOWING PLAN VIEW OF GROUTED RECESS

GROUTED RECESS DETAIL AT END OF POST-TENSIONED STRANDS OF EXTERIOR BOX BEAM

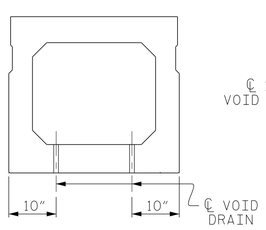

SECTION B-B

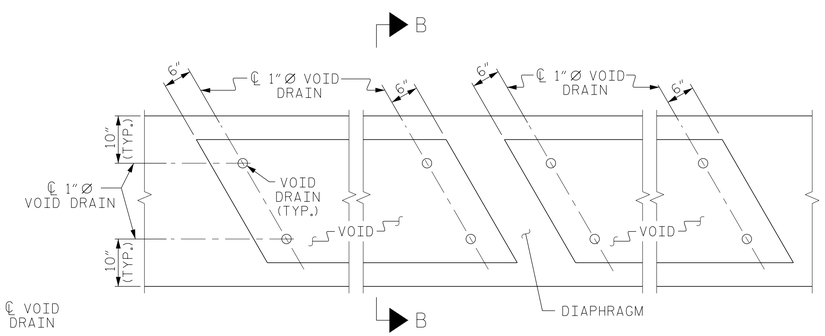

PART PLAN

VOID DRAIN DETAILS

(DIMENSIONS SHOWN ARE TYPICAL FOR EACH VOID)

DEAD LOAD DEFLECTION AND CAMBER SPAN A	
	3'-0" x 2'-9"
90' BOX BEAM UNIT (NC)	0.6"Ø L.R. STRAND
CAMBER (SLAB ALONE IN PLACE)	2⅝" ↑
DEFLECTION DUE TO SUPERIMPOSED DEAD LOAD**	1⅛" ↓
FINAL CAMBER	1½" ↑

DEAD LOAD DEFLECTION AND CAMBER SPAN B	
	3'-0" x 2'-9"
60' BEAM UNIT (NC)	0.6"Ø L.R. STRAND
CAMBER (SLAB ALONE IN PLACE)	¾" ↑
DEFLECTION DUE TO SUPERIMPOSED DEAD LOAD**	¼" ↓
FINAL CAMBER	½" ↑

** INCLUDES FUTURE WEARING SURFACE

PROJECT NO. 17BP.5.R.56

WARREN COUNTY

STATION: 15+60.00 -L-

SHEET 6 OF 7

NORTH CAROLINA PROFESSIONAL SEAL 11725 ENGINEER DAVID R. RUGGLES

DOCUMENT NOT CONSIDERED FINAL UNLESS ALL SIGNATURES COMPLETED

STEWART

Firm License No. C-1051
421 Fayetteville St,
Suite 400
Raleigh, NC 27601
T 919.380.8750
www.stewartinc.com

STATE OF NORTH CAROLINA
DEPARTMENT OF TRANSPORTATION
RALEIGH

STANDARD
3'-0" X 2'-9"
PRESTRESSED CONCRETE BOX BEAM UNIT

REVISIONS						SHEET NO.
NO.	BY:	DATE:	NO.	BY:	DATE:	S-10
1			3			TOTAL SHEETS
2			4			21

ASSEMBLED BY :	H.ASSFOURA	DATE :	11/14
CHECKED BY :	P.JACOB	DATE :	11/14
DRAWN BY : DGE 11/11	REV. 8/14	MAA/TMG	
CHECKED BY : TMG 11/11			

3/8/2016
...\400_010_17BP5R56_SMU_SP06.dgn
USER:jloftus